Parallel Computing

Reference books

- “Advanced Computer Architecture: Parallelism, Scalability, Programmability”, K. Hwang, Tata McGraw-Hill Edition.
- “Computer Architecture And Parallel Processing”, K. Hwang & Briggs, McGraw Hill Education.

Topics to be covered

- Introduction: What, Why, Who
- Parallelism in Uniprocessor System
- Parallel Computer Structures

For over a decade prophets have voiced the contention that the organization of a single computer has reached its limits and that truly significant advances can be made only by interconnection of a multiplicity of computers in such a manner as to permit cooperative solution.

Gene Amdahl, 1967

Introduction

- Parallel processing has emerged as a key enabling technology in modern computers.
- Concurrent events are taking place in today's high-performance computers due to the common practice of multiprogramming, multiprocessing, or multicomputing.

- **Serial Computing:**

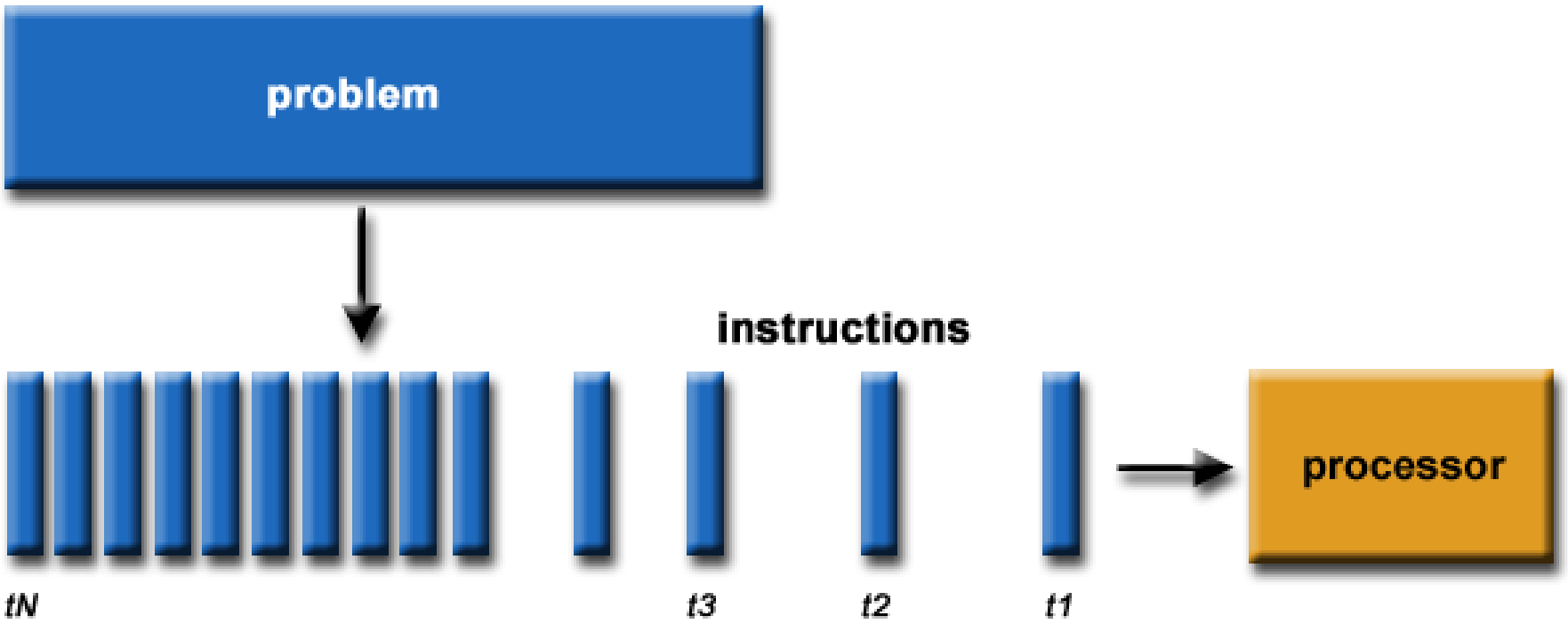

- **Parallel Computing:**

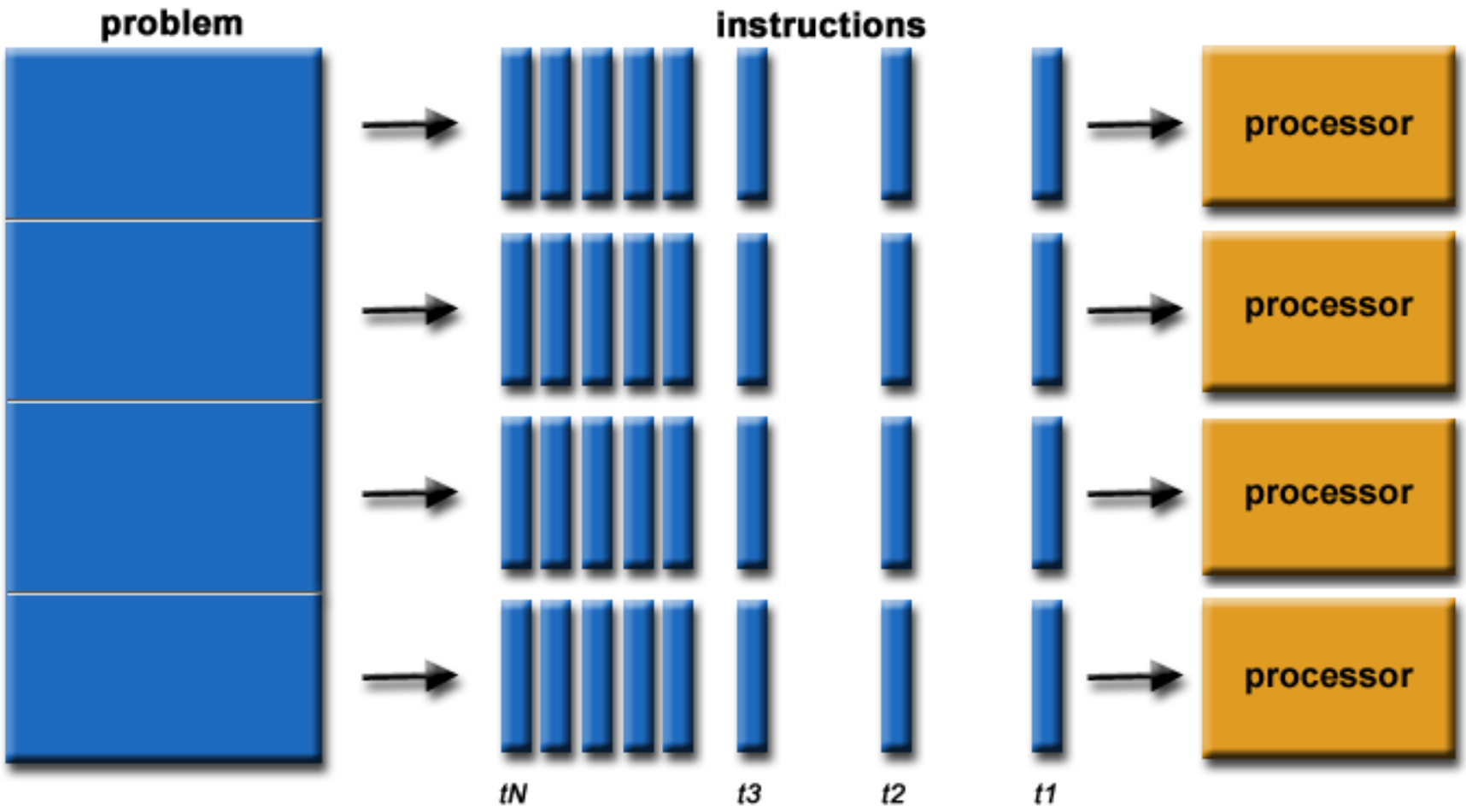

Why use Parallel Computing?

- The real world is massively parallel
- Save time and/or money
- Use of non-local resources
- Provide concurrency
- Make better use of underlying parallel hardware

Parallel Processing Applications

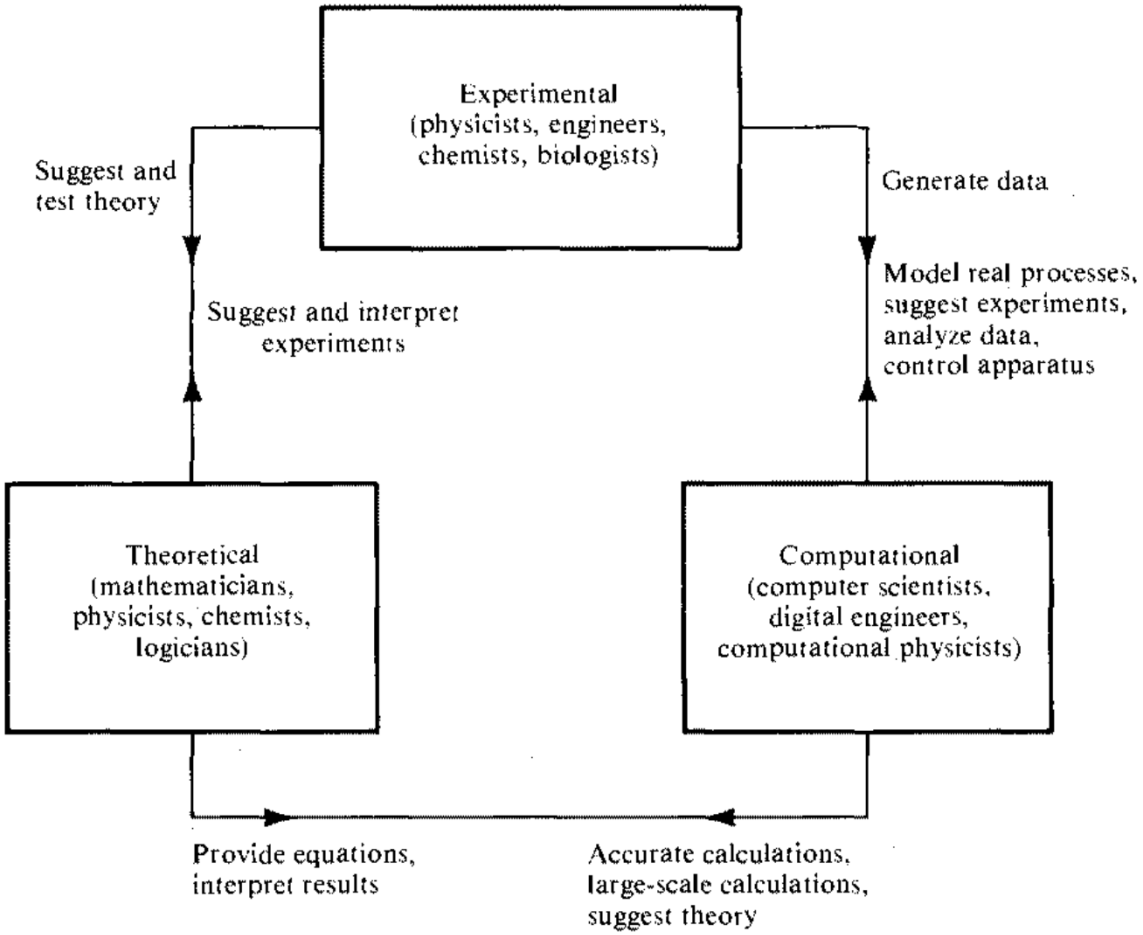

Figure 1.19 Interaction among experiments, theories, and computations to solve large-scale scientific problems (Courtesy of Rodrique et al., *IEEE Computer*, 1980).

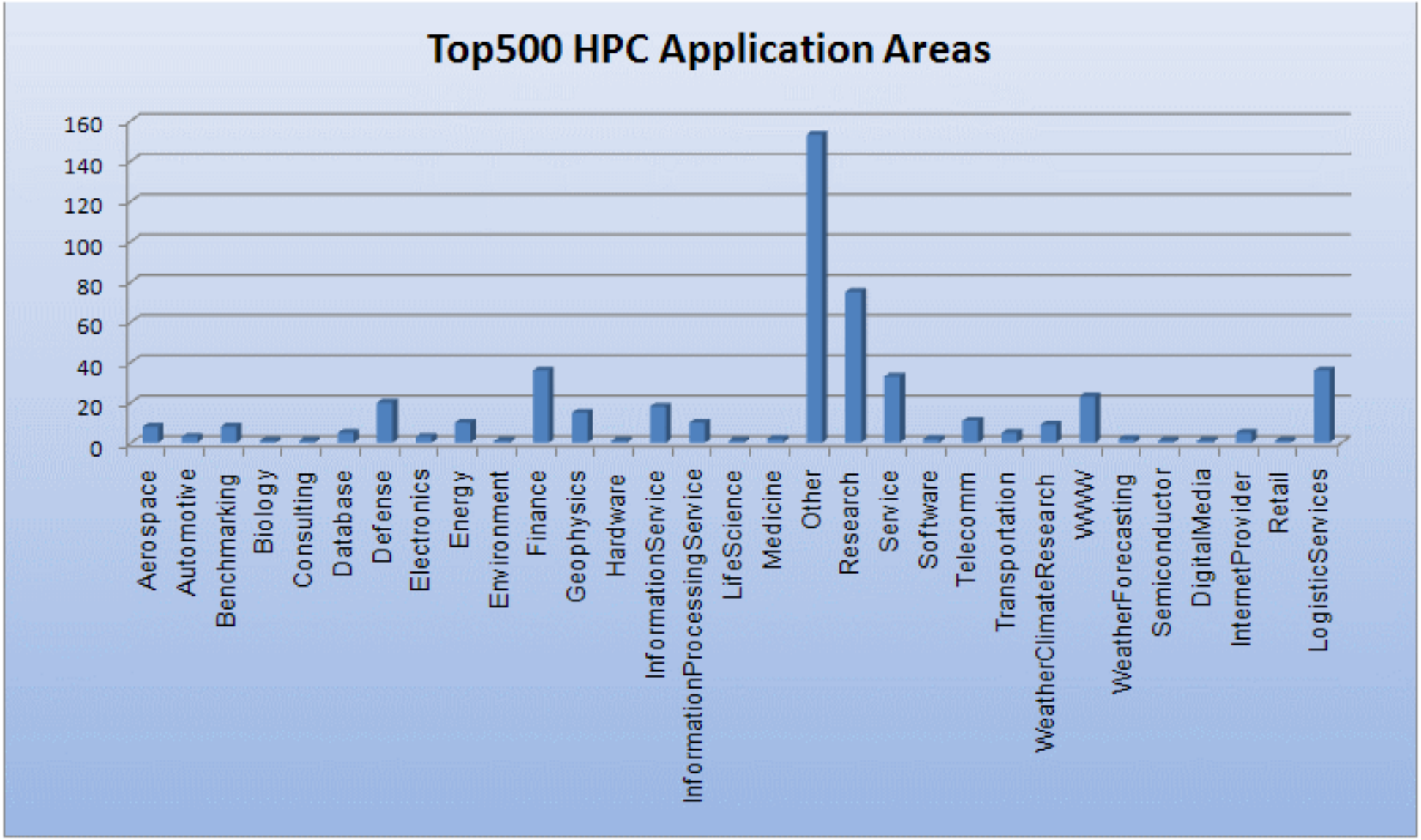
Top500 HPC Application Areas
160
140
120
100
80
60
40
20
0
Aerospace
Automotive
Benchmarking
Biology
Consulting
Database
Defense
Electronics
Energy
Environment
Finance
Geophysics
Hardware
InformationService
InformationProcessingService
LifeScience
Medicine
Other
Research
Service
Software
Telecomm
Transportation
WeatherClimateResearch
WWW
WeatherForecasting
Semiconductor
DigitalMedia
InternetProvider
Retail
LogisticServices

Parallelism in Uniprocessor Systems

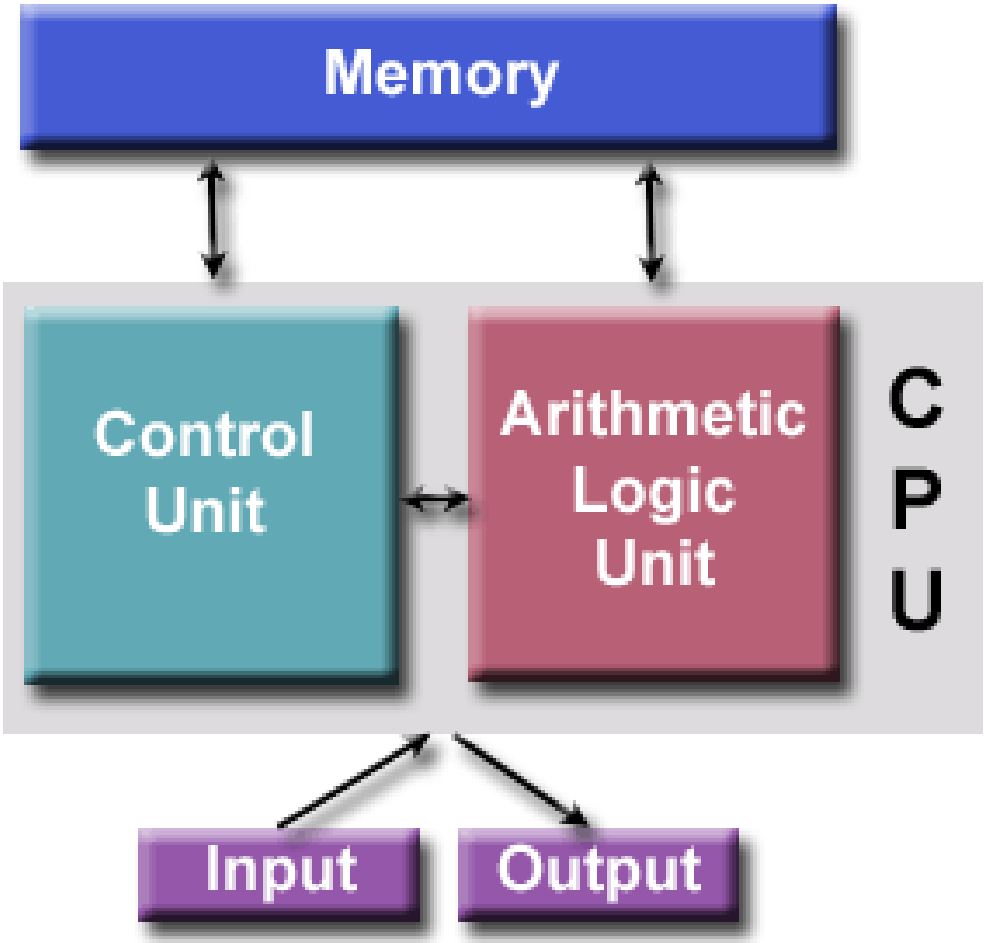

Parallel Processing Mechanisms

- Multiplicity of functional units
- Pipelining within the CPU
- Overlapped CPU and I/O operations
- Use of hierarchical memory system
- Multiprogramming and time sharing

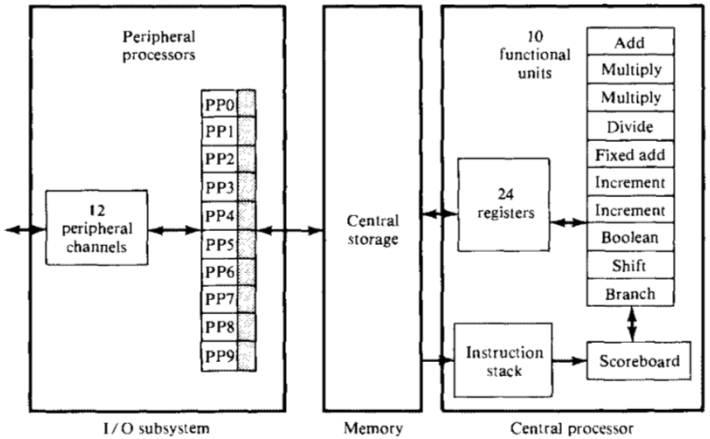

Figure 1.5 The system architecture of the CDC-6600 computer (Courtesy of Control Data Corp.).

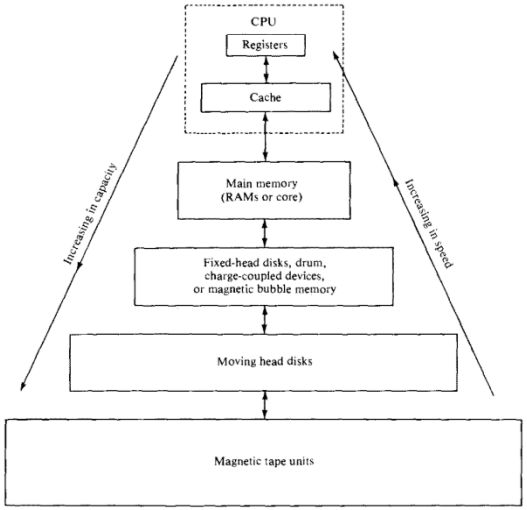

Figure 1.6 The classical memory hierarchy.

Parallel Computer Structures

- Divided into three architectural configurations:
  - Pipelined computers (temporal parallelism)
  - Array processors (spatial parallelism; synchronous processing elements)
  - Multiprocessor systems (asynchronous parallelism)

Pipelined Computers

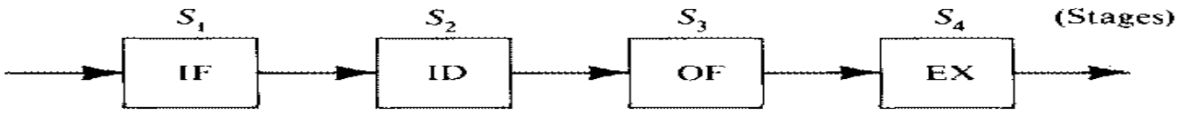

(*a*) A pipelined processor

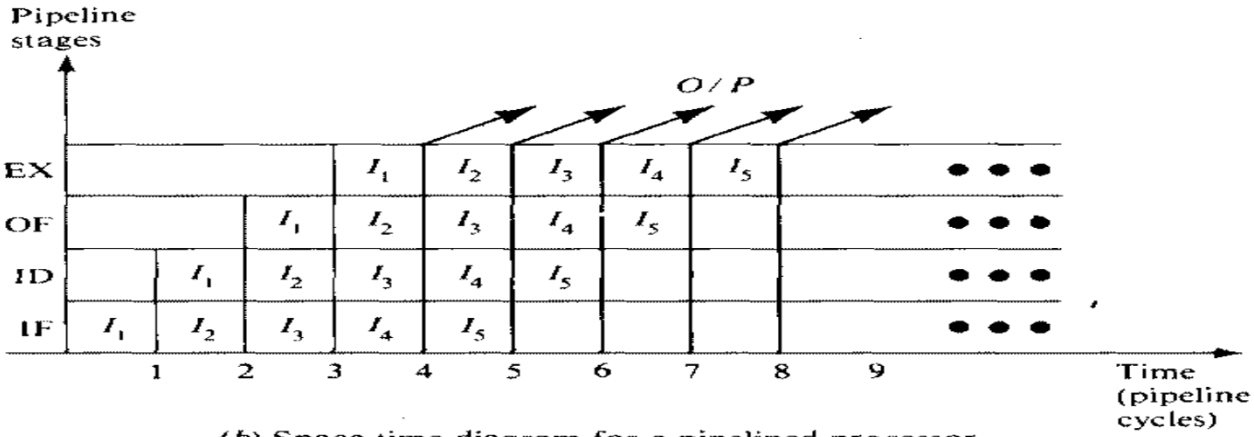

(*b*) Space-time diagram for a pipelined processor

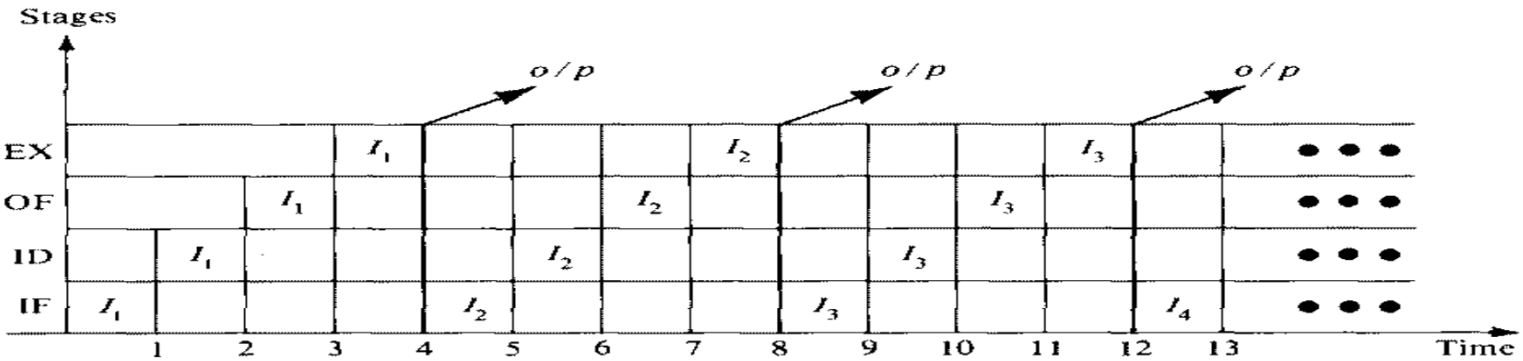

(*c*) Space-time diagram for a nonpipelined processor

Array Processors

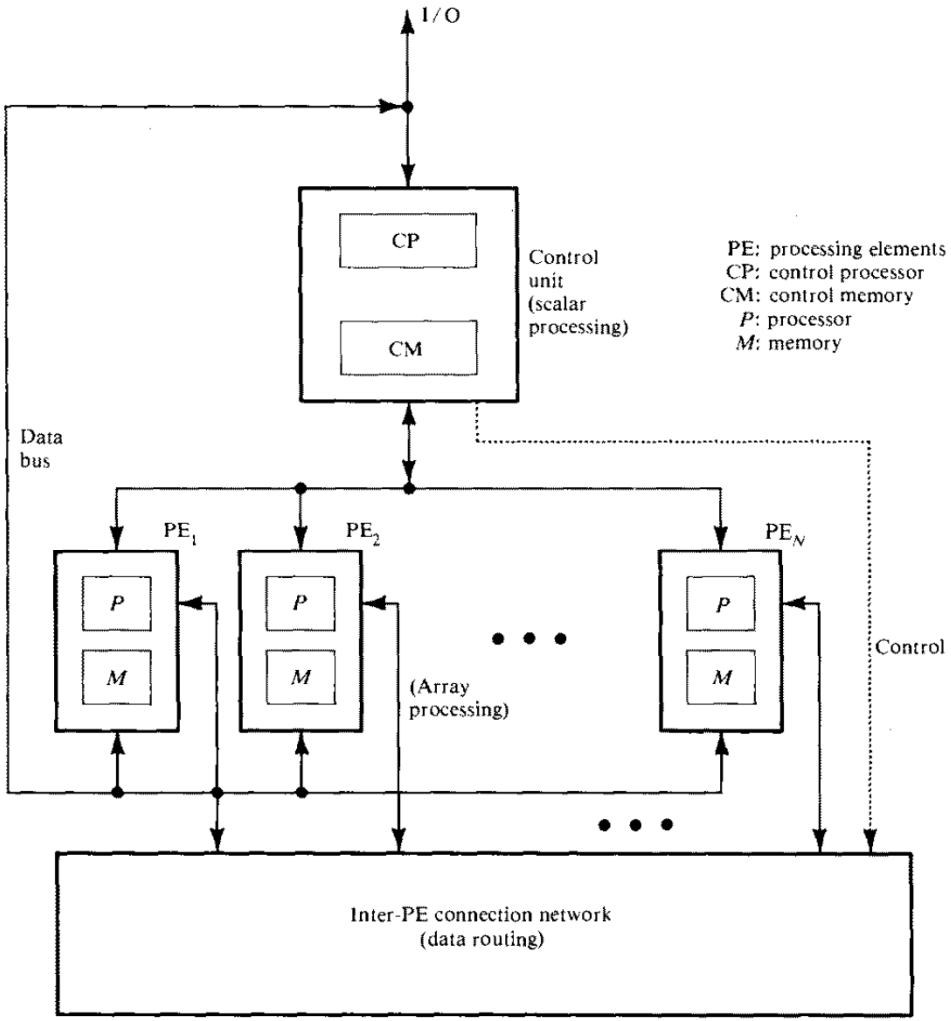

Figure 1.12 Functional structure of an SIMD array processor with concurrent scalar processing in the control unit.

Multiprocessor Systems

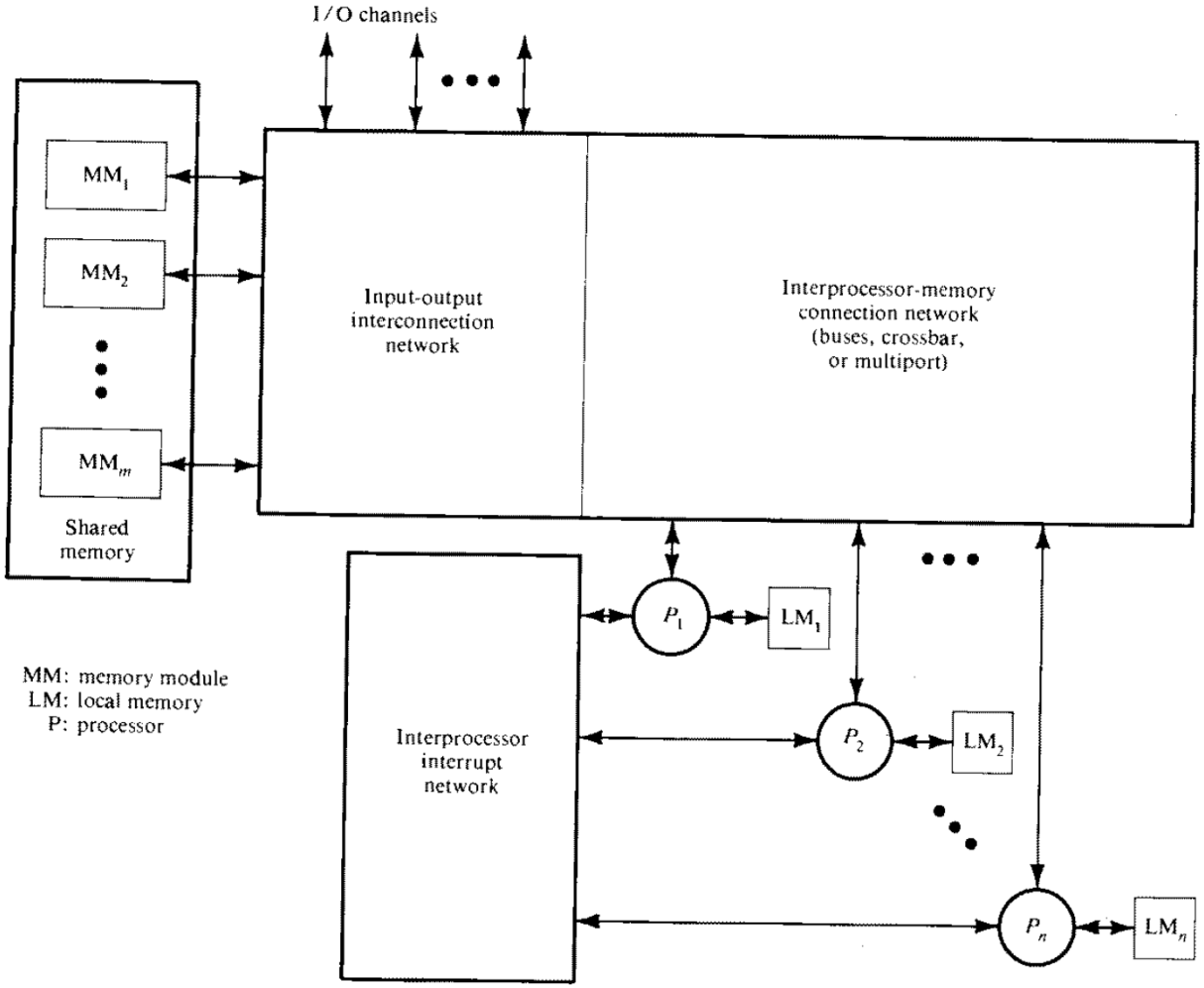

Figure 1.13 Functional design of an MIMD multiprocessor system.

Questions?